ATTENZIONE!

TENERE A 100 mm DALLE PARETI LATERALI

ATTENZIONE!

TENERE A 100 mm DALLE PARETI LATERALI

ATTENZIONE! TENERE A 100 mm DALLE PARETI LATERALI

ATTENZIONE! TENERE A 100 mm DALLE PARETI LATERALI

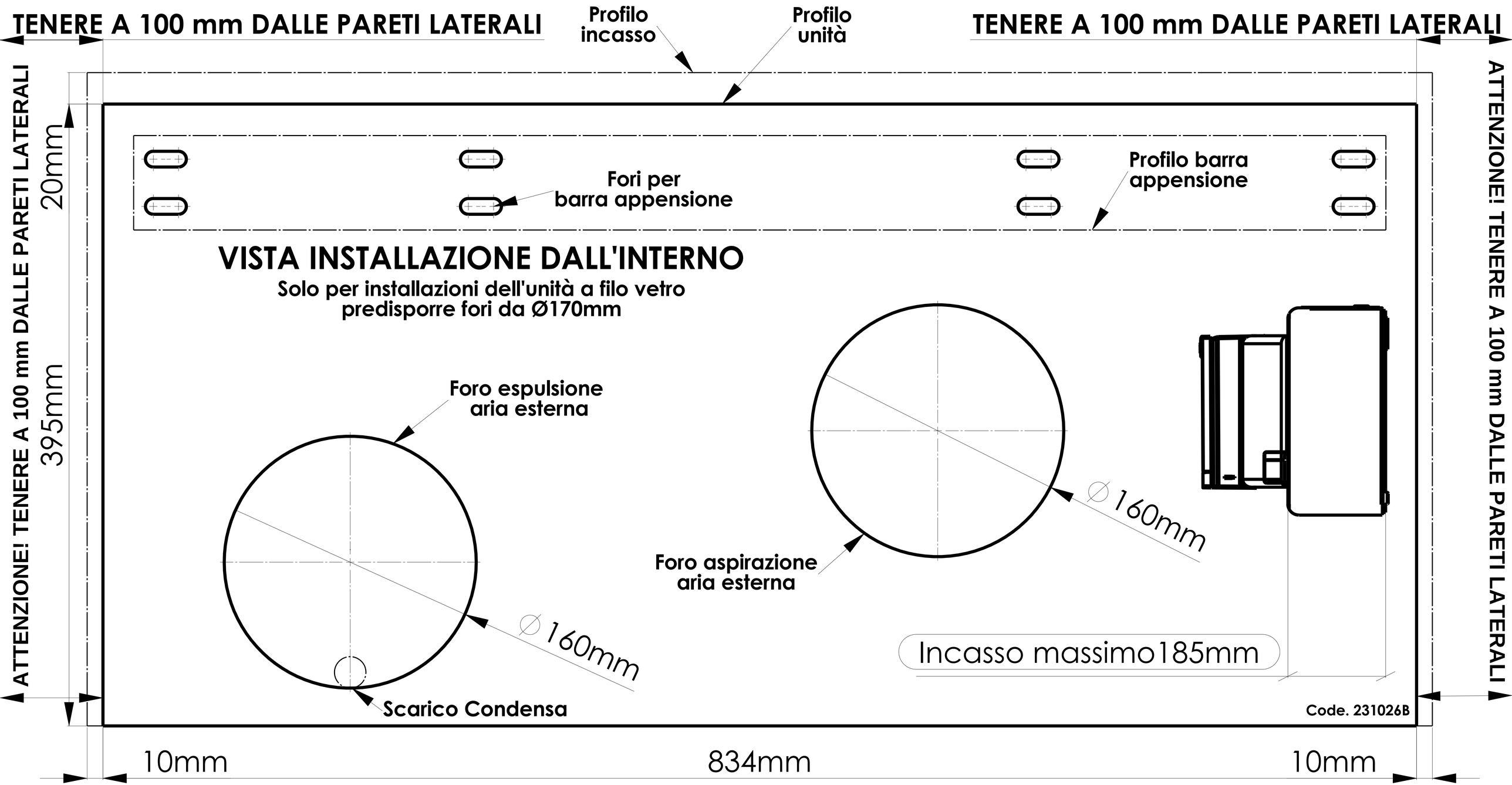

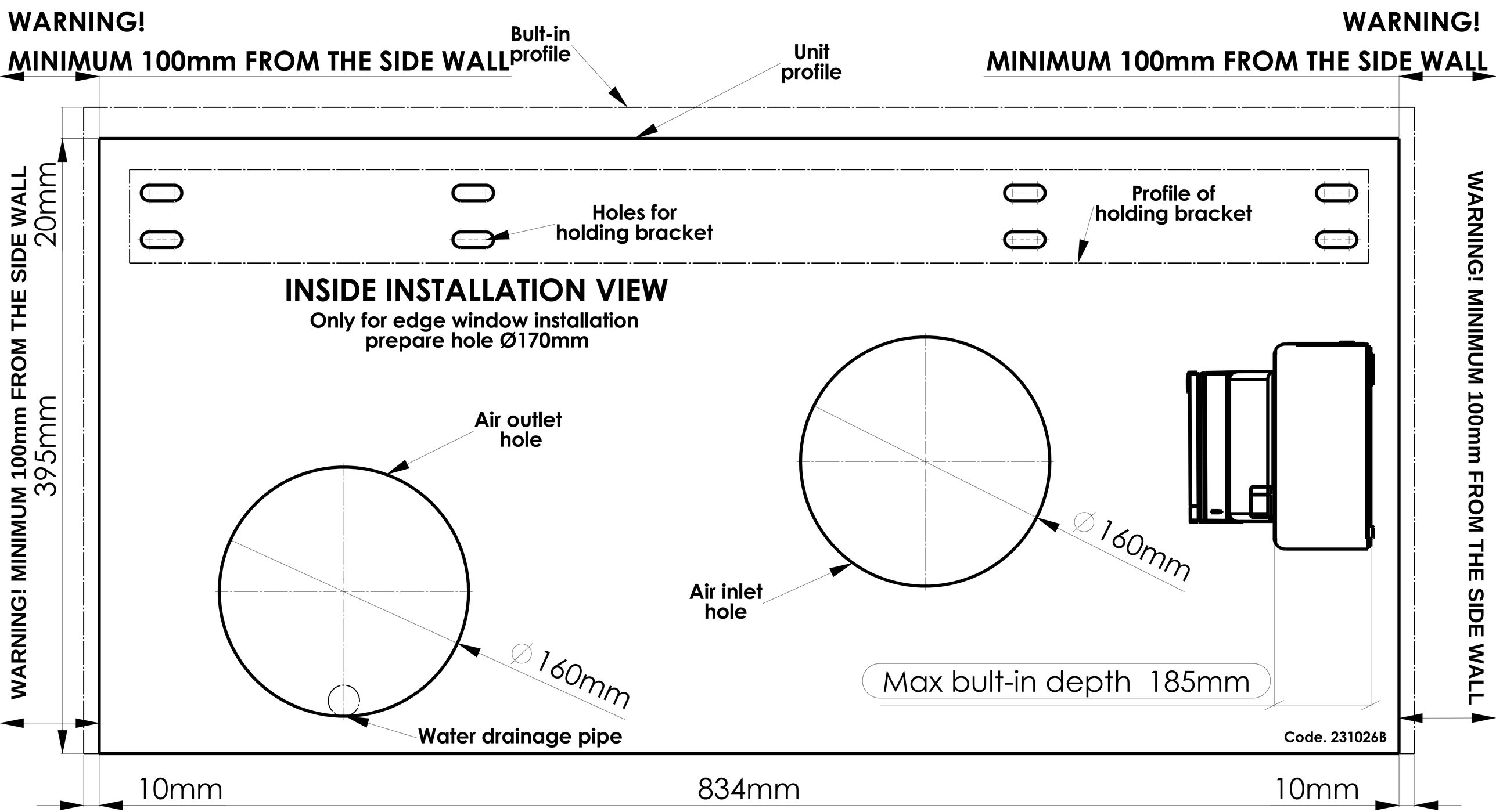
WARNING!
MINIMUM 100mm FROM THE SIDE WALL
Bult-in profile
Unit profile
WARNING!
MINIMUM 100mm FROM THE SIDE WALL
WARNING! MINIMUM 100mm FROM THE SIDE WALL
20mm
395mm
Holes for holding bracket
Profile of holding bracket
WARNING! MINIMUM 100mm FROM THE SIDE WALL
INSIDE INSTALLATION VIEW
Only for edge window installation
prepare hole Ø170mm
Air outlet hole
Air inlet hole
∅ 160mm
∅ 160mm
Max bult-in depth 185mm
Water drainage pipe
Code. 231026B
10mm
834mm
10mm